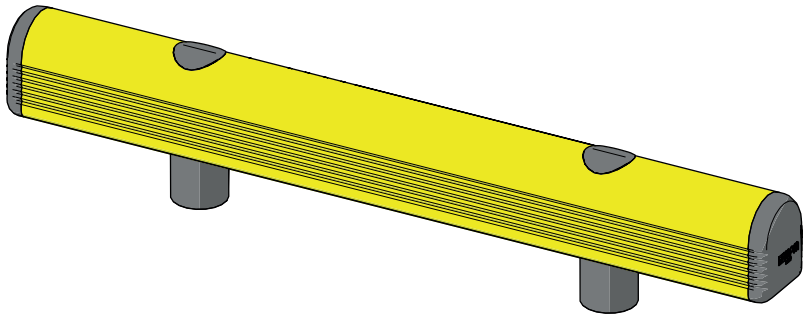

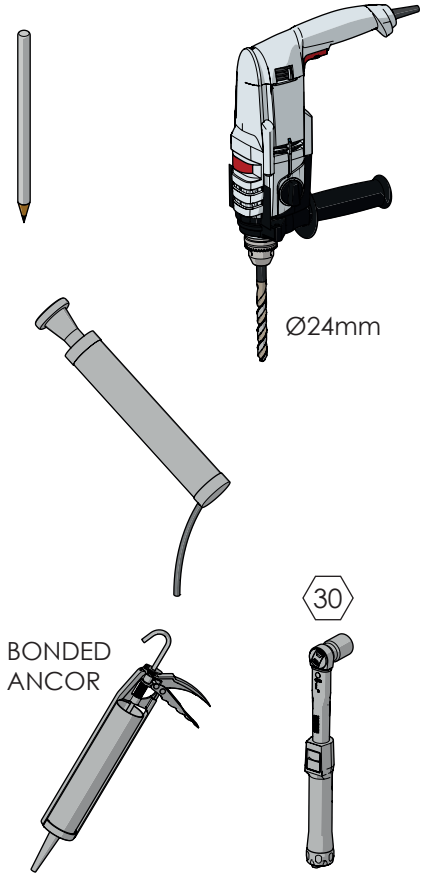

1

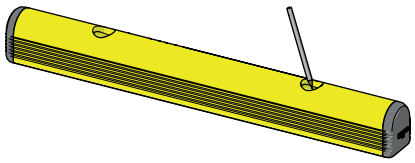

2

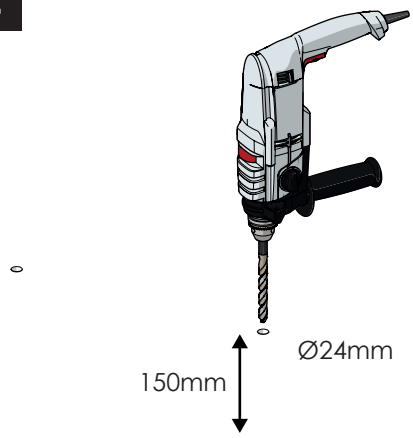

3

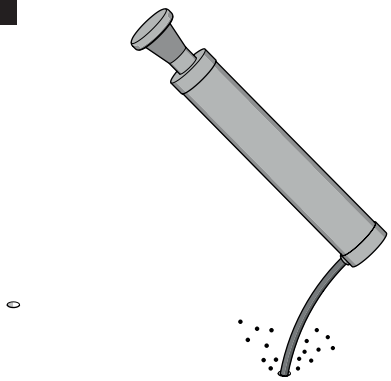

4

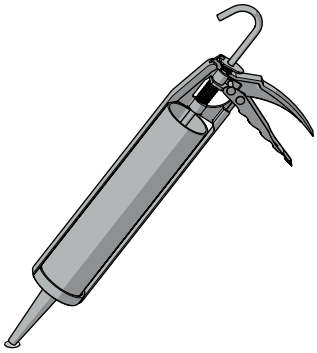

5

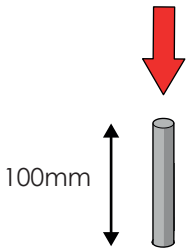

6

MPM PLASTIC PROFILES

7

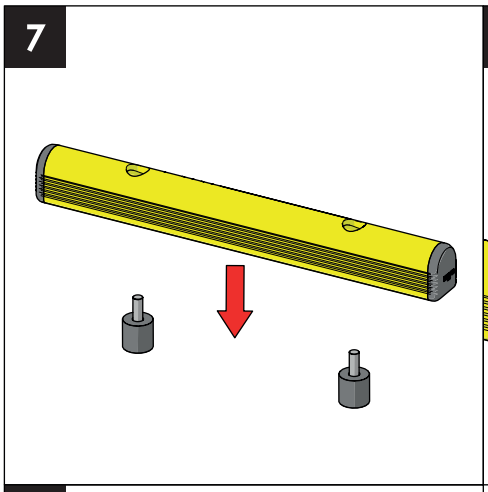

8

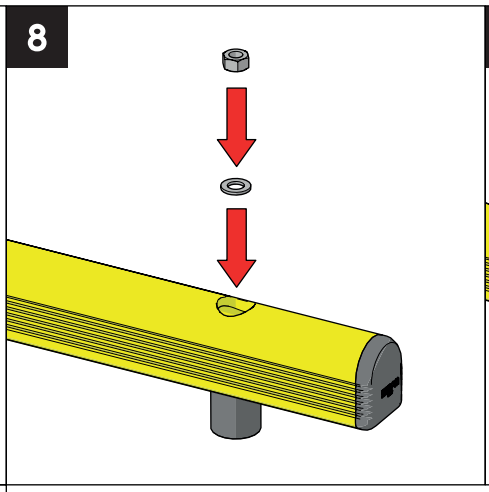

9

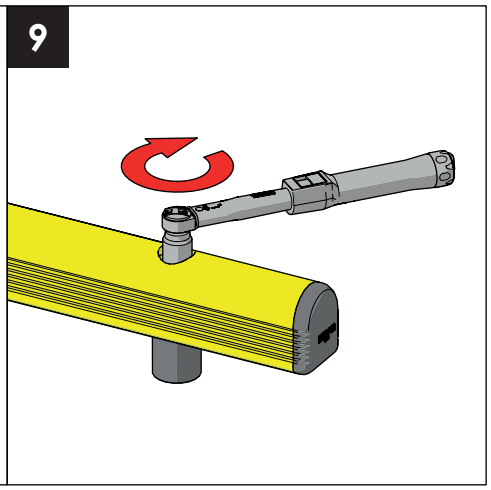

10

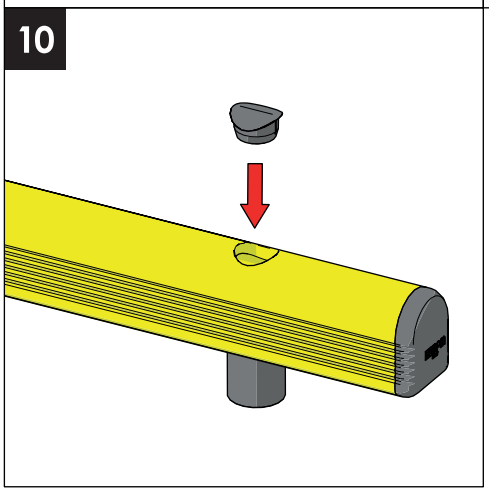

MPM PLASTIC PROFILES