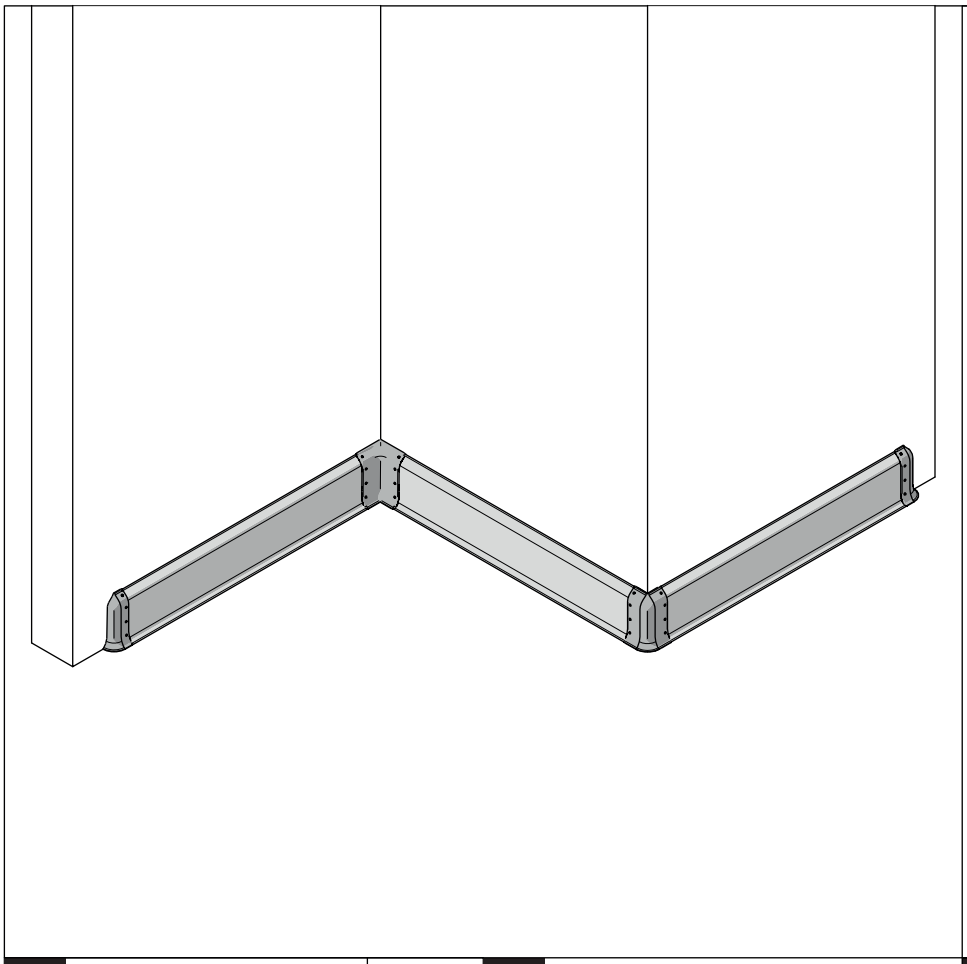

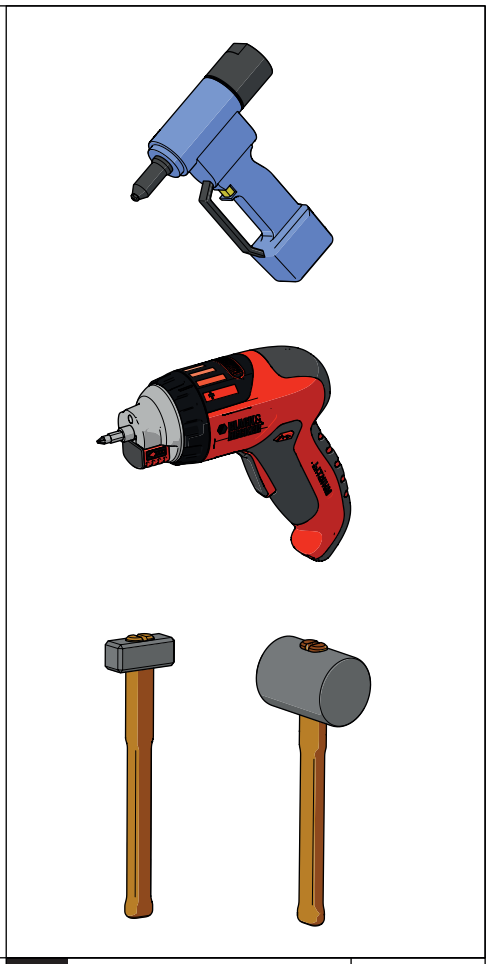

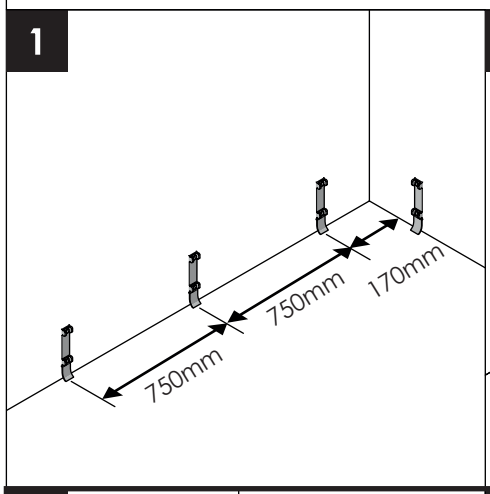

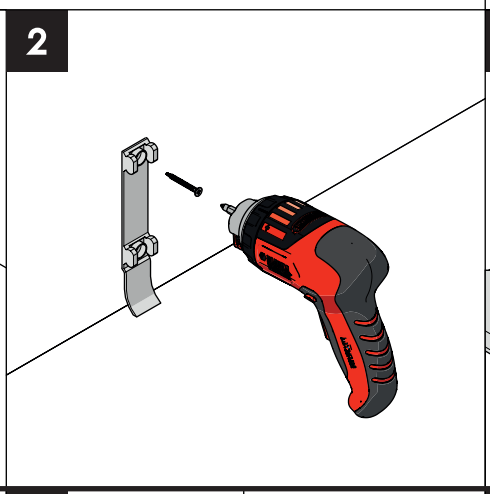

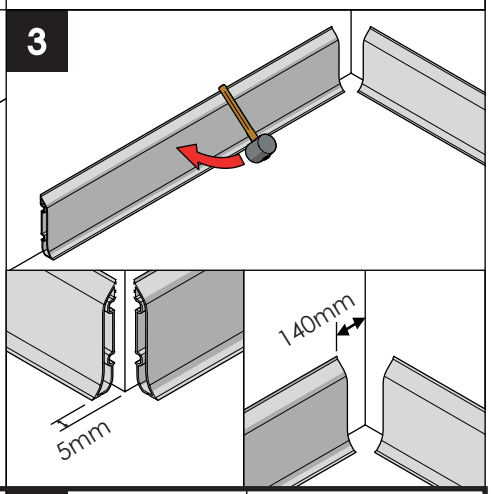

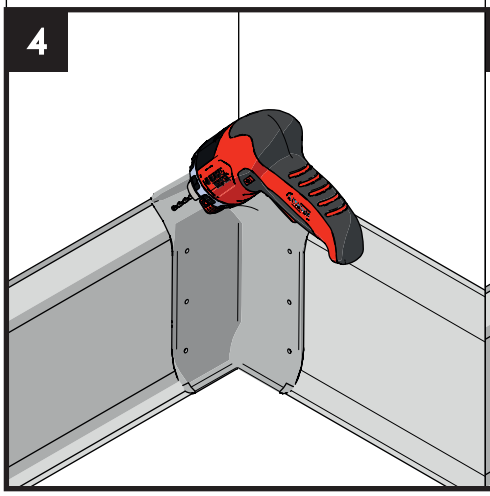

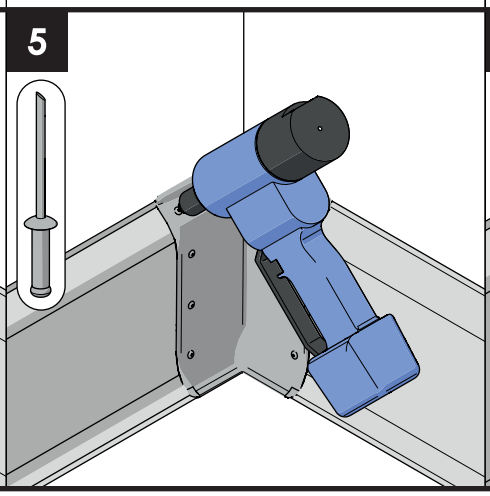

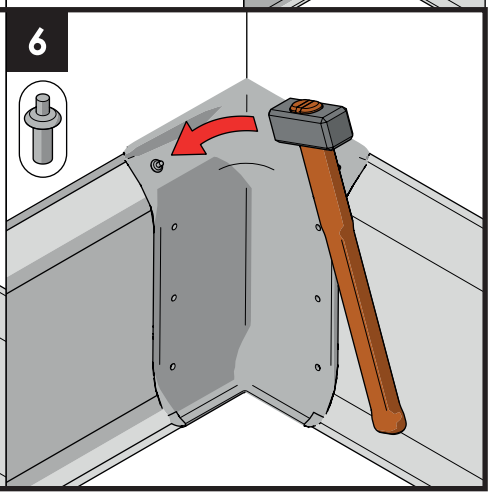

MPM PLASTIC PROFILES

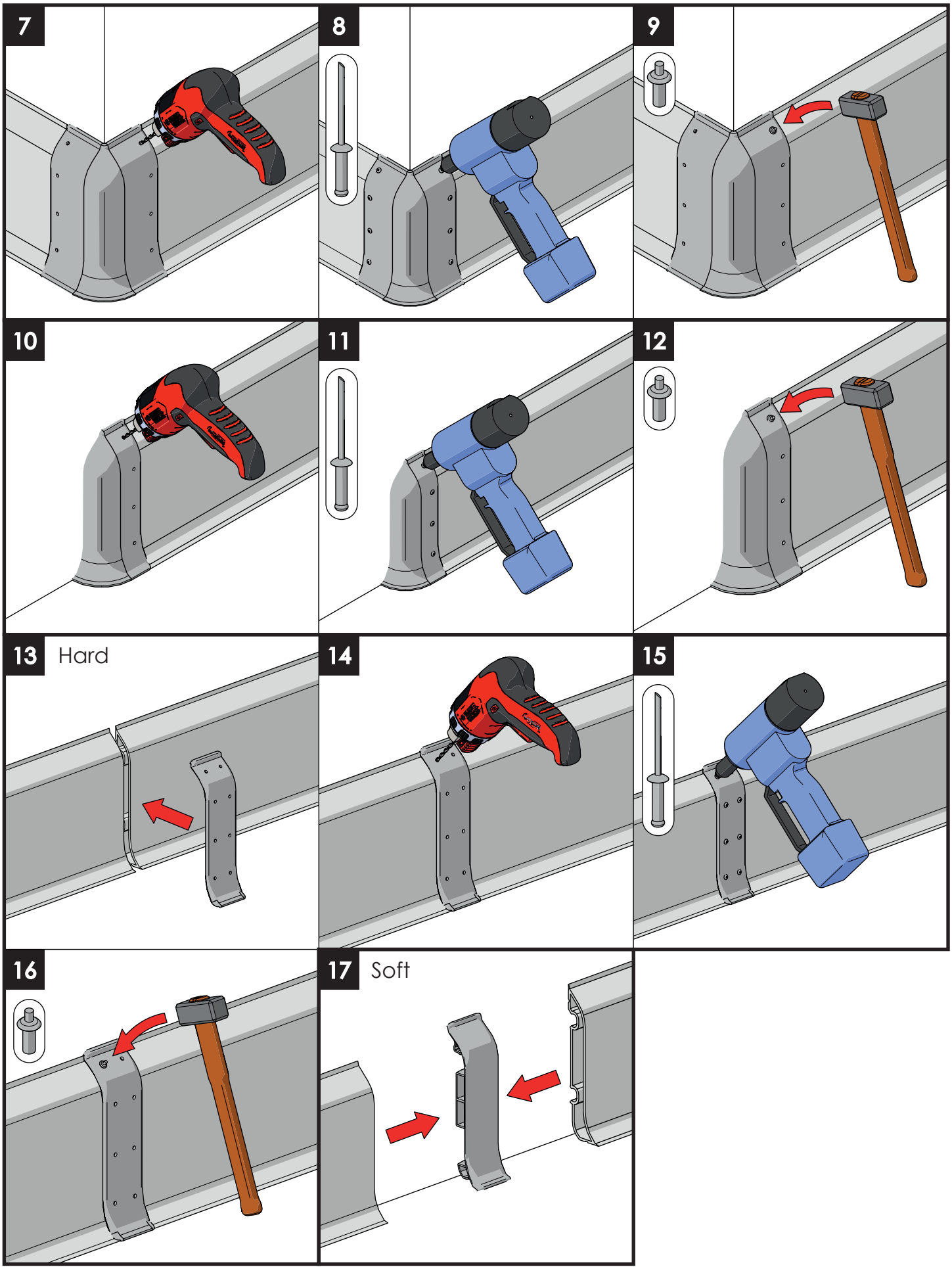

MPM PLASTIC PROFILES