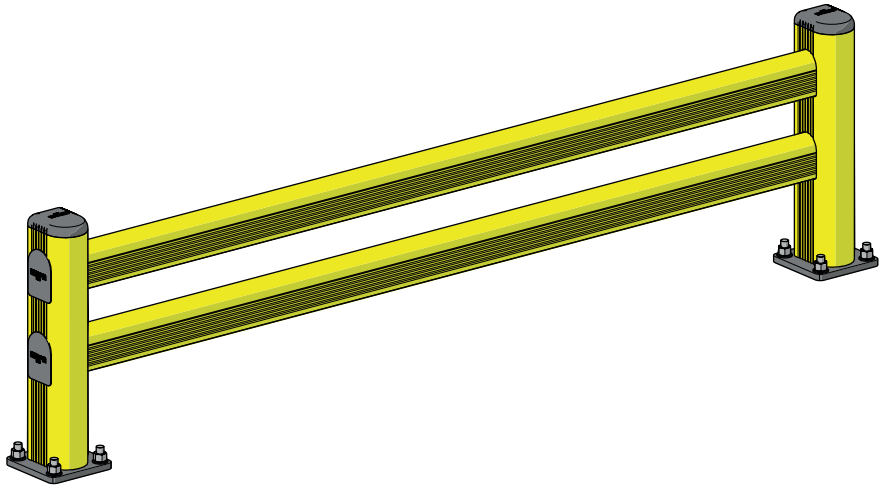

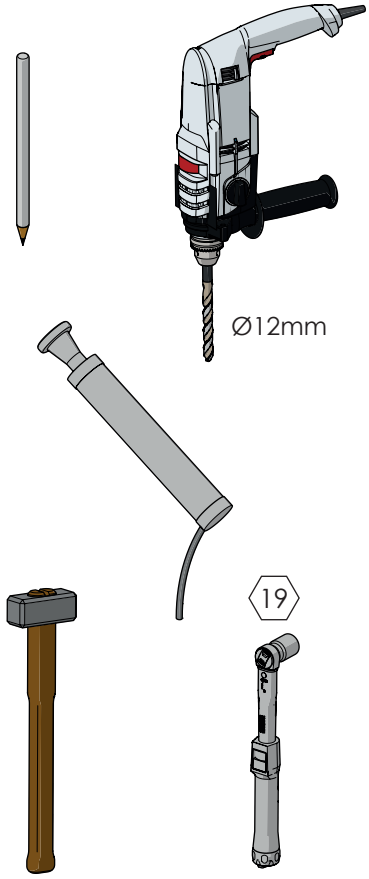

1

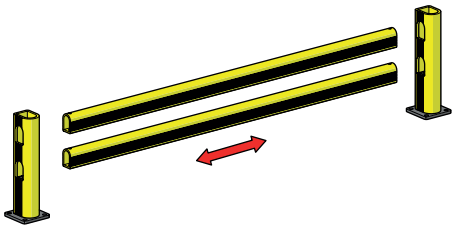

2

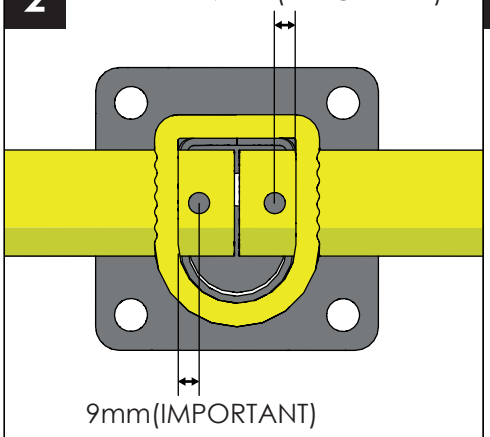

3

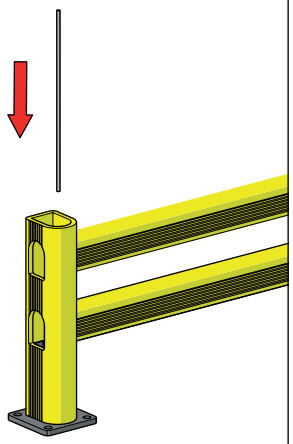

4

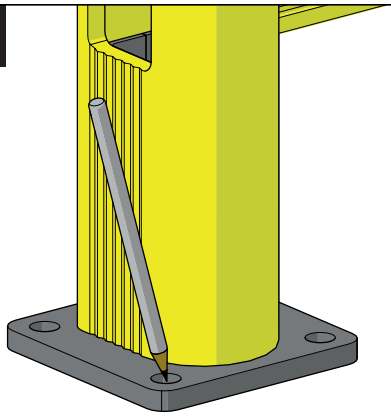

5

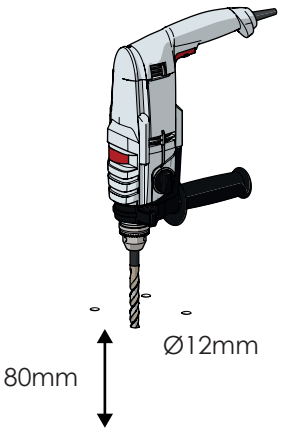

6

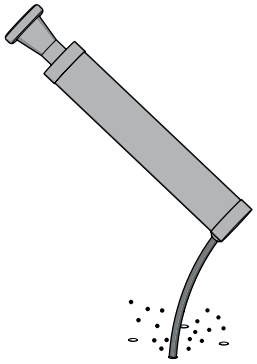

MPM PLASTIC PROFILES

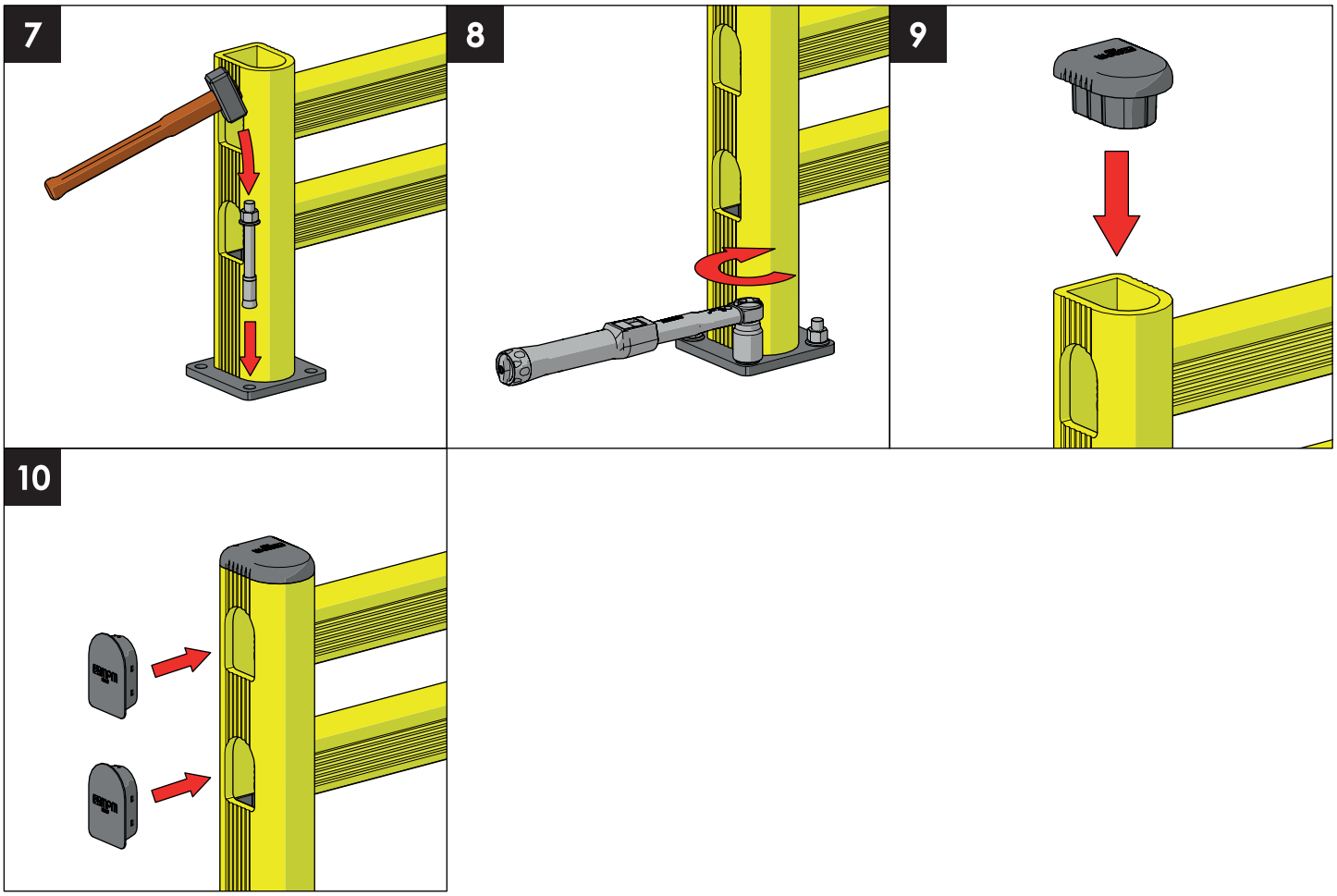

MPM PLASTIC PROFILES